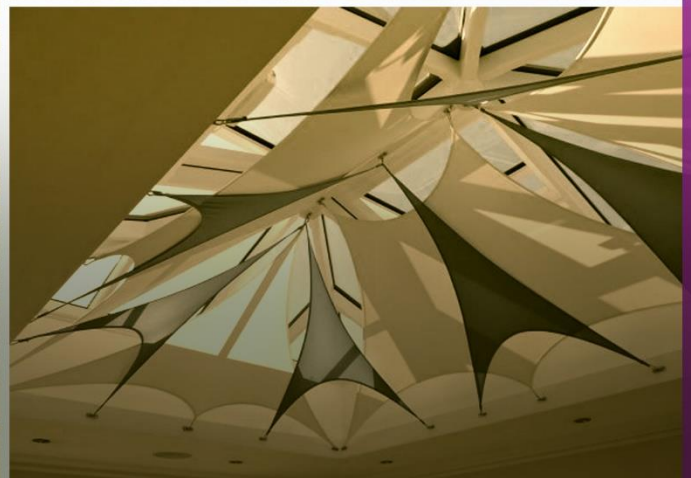

www.alhattantents.com

AL HATTAN TENTS & SHADES LLC

COMPANY PROFILE

الهتان

Al Hattan

Engineered for seasons and reasons

Engineered for seasons and reasons

ABOUT US

We are a dedicated team of Professionals, Engineers & Technicians who believe and practice our skills in the manufacturing of modern & creative pre-engineered fabric shade structures. Our pursuit of perfection in all we do had resulted in bringing path breaking outcomes that had exceeded the expectations of our clients making us the best Tents and Shades manufacturing company in Dubai.

All our industrial solutions and products are created to reflect our philosophy “Engineered for Seasons and Reasons”. Our business scaling and improvement methodology starts with process mapping combining the flow of information and materials that are needed to fulfil it. This helps to eliminate wastage and improve efficiency. We do the cause & effect analysis to identify the source of problems and their impact, we apply PDCA cycle- Plan, Do, Check and Act that supports improvement efforts from start to finish. This approach is applied in all our initiatives to improve productivity and safety. The experience and expertise we have gained over the past years help us in offering the most cost-effective solution for our customers without compromising quality.

OUR VISION & MISSION

Al Hattan is the third company from Al Aydi family, and is a result of many ideas and expertise we have gained over years. Our first tents and shades company was started by my father Mr. Arafa Awad Al Aydi in 1997. We aim to deliver the country a product, classy of its kind and a service that sustains the endeavour, through our skills of manufacturing safe, sophisticated and comfortable shade structures with less ecological footprint.

ALAA AL AYDI

FOUNDER CHAIRMAN

VISION

Give a magical experience to our clients through our creative Tents & Shades, like a child experiencing the drizzling rain (Hattan) under the shade of mother.

MISSION

Pursue excellence in Tents & Shades manufacturing with reduced ecological footprint through continuous improvement driven by the integrity, teamwork and creativity of our people.

Drive profit gain by Innovation, Engineering & Technology and measure success by the happiness and difference we bring in the lives of the people who associate with us from the bottom to the top.

OUR PRODUCTS

TENTS

CLEAR SPAN MARQUEE TENTS, GAZEBOS, PINNACLE TENTS, RAMADAN TENTS, DOME, PAGODAS & POLYGON TENTS

CARPARKING SHADES

OURCANTELIVER, TRUSS, UMBRELLA & SAIL SHADES, WE ALSO CUSTOM DESIGN PARKING SHADES

AWNINGS & SUNSHADES

SWIMMING POOL SHADES, PLAY AREAS, WALKWAYS, LIVESTOCK SHADES, PATIO AWNINGS & PERGOLAS

- As a company, we believe our strength is our people and had invested in their skills improvement, production equipment and space to ensure each item we manufacture measures up to our impeccable quality standards.

- We are affordable because we effectively use the technology and plan our production in such a way that we have less material wastage, less labour cost and less time for executing a project.

TENTS

الهتّان

Al Hattan

Engineered for Seasons and Reasons

MAJLIS

Al Hattan Tents manufacture fully customized Majlis tents understanding the significant aspect of its heritage. Framework and structure is done using hot dip galvanized steel to withstand rust and corrosion. Majlis tent outer layer is made of German machine stitched sha'ar that comes in black and white color & Inner lining is done using Spanish or Saudi Sadu cloth. Interior lighting, design and decorations are done to reflect the culture and heritage of Arab world.

PAGODA TENT

Pagoda Tents are known by many names in the market -Marquee tents, Pinnacle tents or Chinese hat tents. Luxury outdoor high peak pagodas are used for Weddings, Garden Parties & Events and is one of the best-selling tent styles. High peak centre posts on these tents are supported by cross cables extending to each corner and the inner space of the tents are not hindered by any poles touching the ground.

	Optional
○ Frame – Galvanized Steel Tube/ Hard pressed extruded Aluminim ○ Connectors & Base Plate- Hot Dip Galvanised Steel ○ Roof & Gable- 850 GSM PVC Fabric (Flame Retardant, UV Resistant, Water Proof) ○ Max. wind load: 80~100km/h	○ PVC Window/ABS/Vertial Glass Walls ○ Single/ Double- Wing Glass Doors/Sliding door ○ Carpet/ Lining /Curtain ○ Air Conditioning /Generator/Lighting ○ Furniture and Interior Decorations

DOME TENT

Dome Tents are known by many names like Galaxy, Geodesic Dome, Yurt house tents and Garden Igloo Tents. Dome tents are easy and fast to assemble and dismantle. This design is exceptionally durable and can be customized to any size as per our client's requirement, there is no poles inside the tent and inner space is 100 % available.

Product Details

- Main frame: Hot Galvanized steel pipe
- Fabric- 850 GSM PVC Fabric (Fire Retardant, UV Resistant, Water Proof) / 650g/sqm translucent white PVC with Block out properties
- Wind Resistance: 100 km/h
- Accessories: Strong Steel base, Screws & Expansion bolts etc.

GAZEBO TENTS

Gazebo Tents are popular for centuries and are built on landscapes and gardens. It enhances the beauty of landscape, acts as a shelter or a place to rest. They are used widely for small events, weddings and family gatherings. Gazebos are free standing structure with the walls mostly open on all the sides and roofs are often designed in the form of a cupola.

Standard sizes available are 3x3m, 4x4m, 5x5m & 6x6m.

Product Details

- Structure- Hard pressed extruded Aluminum alloy T6061/T6 for frame.
- Fabric- 850 GSM PVC Fabric (UV Resistant, Flame Retardant, Water Proof)
- Wind load 80km/h
- Connectors- hot-dip galvanized steel
- Temperature: -30 degree Celsius to +70 degree Celsius
- Easy to assemble and dismantle

ARCUM TENT

Arcum tents are based on A-frame clear span tent design and wildly used for outdoor festivals, music events and wedding parties. The arc roof design of Arcum tents is made by pre-pressed aluminium roof-beam that gives a capacious and more modern feel to Arcum tent, we use hard pressed extruded aluminium alloy for the framework, these tents have lot of clear span space that will give a feeling of openness to use it as Exhibition tents.

Standard Arcum Tent Specifications-Al Hattan Tents			
Span Width	**Eave Height**	**Ridge height**	**Bay Distance**
10	4	5.6	5
15	4	6.4	5
20	4	7.1	5
30	4/5	8.8/10.8	5

POLYGON TENT

Polygon or Multi sided tent structures are perfect choice for Indoor Sports & Trainings events. These tents have stronger and advanced roof structure with better wind resistance. Standard Span widths starts from 10m and goes up to 50m. These multi sided tents can be easily installed for permanent or temporary use and can be relocated or expanded based on Client requirements.

Product Details

o Framework- Hard pressed extruded aluminum alloy 6061/T6 o Fabric- 850 GSM PVC Fabric (Flame Retardant, UV Resistant, Water Proof) o Wind load 100km/hr.	o Side Wall –PVC/Glass Panel/ABS or Sandwich Wall o Connections - Hot Dip Galvanized Steel Connectors

CLEAR SPAN MARQUEE TENT

Al Hattan Tents do the manufacturing and supply of excellent quality Clear Span Marquee Tents that meets all the building standards and fire codes. If you are looking for a company to custom manufacture a marquee clear span tent, contact our experts.

Clear Span Tent Specifications-Al Hattan Tents			
Span Width (mtr)	**Eave Height** (mtr)	**Ridge height** (mtr)	**Bay Distance** (mtr)
10	3	5.02	5
15	3	6.11	5
20	3	7.15	5
25	4	9.22	5
30	4	10.2	5
40	4	12.3	5

CURVE TENT

Curve Tents looks very elegant in comparison with the A-Frame tents, the design is strong and durable and has a wind resistance of 100km/h, it is a modular structure and can be expanded (bay length 5m). We use hard pressed extruded aluminium for the frame structure, roof and side walls are made of fire-retardant double PVC coated polyester textile. Curve tents are used as Exhibition Tents, Wedding Tents and are used for many Sporting events etc.

Product Details

○ Frame: Hard pressed extruded Aluminum 6061/T6. ○ Fabric: 850 GSM PVC Fabric (Flame Retardant, UV Resistant, Water Proof) ○ Roof Pitch 25 ° ○ Wind rating: 100km/h	○ Components - hot dipped GI Steel, corrosive resistant ○ Accessories: Curtain, Lining, Cassette wooden flooring, Ground anchor, Weight Plates, Glass/ABS/Sandwich walls.

CAR PARKING SHADES

الهتان
Al Hattan
Engineered for seasons and reasons

CAR PARKING SHADES

ARCH

PYRAMID

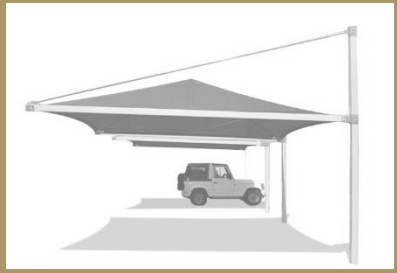

UMBRELLA

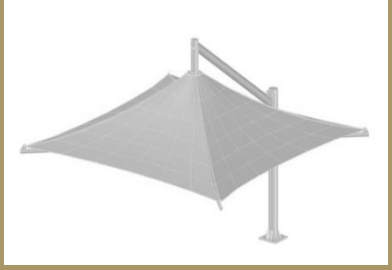

FLATROOF

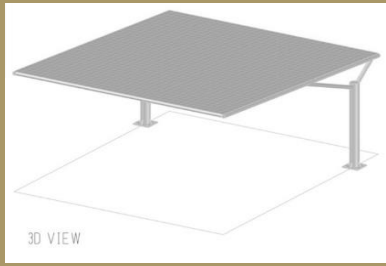

SOLAR

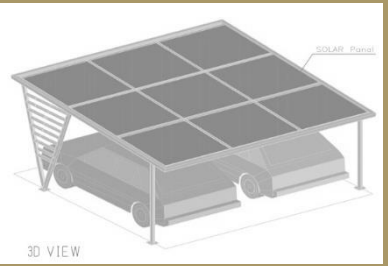

- ✓ Al Hattan Tents offers visually exciting modern Car parking shades to both commercial & residential clients.
- ✓ We offer both Cantilever and Wave crest designs, Tensile Structures can cover larger span area, exceed to 200m. Compared to traditional style of construction it is more eco-friendly, needs less material and minimal structural support.
- ✓ In comparison to conventional designs, tensile structures & Car canopies will cost 1/3 to 1/2 less in price.
- ✓ Our car shades are easy to Install, All shades are sent to site after pre-assembly inspection.
- ✓ After Service and Warranty: 10 years

CAR PARKING SHADES

PS/A01-CANTILEVER ARCH

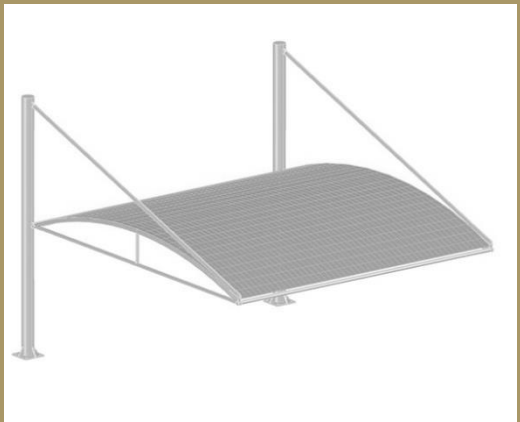

PS/A02-CANTILEVER DOUBLE HANGING

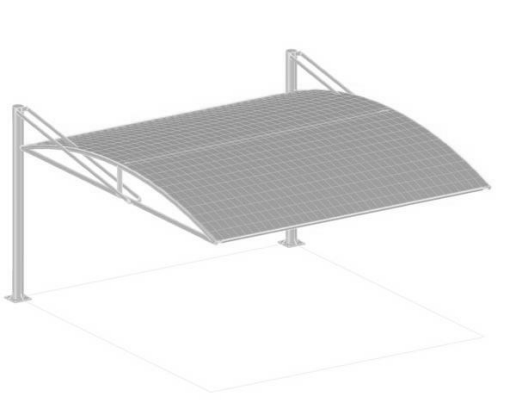

PS/A03-TRUSS ARCH 3

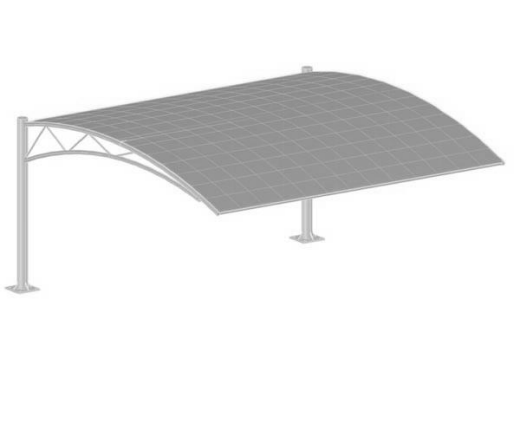

PS/A04-TRUSS ARCH 4

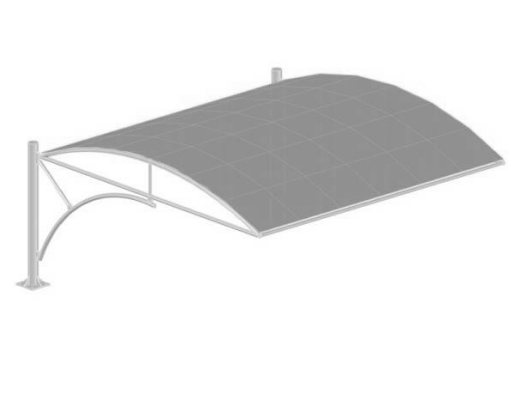

TECHNICAL SPECIFICATIONS	
STANDARD SIZE (Parking Angle 90°	Length - 6m; Width - 1 Car- 3m, 2 Cars - 6m; Clear Height- 2.5m (All dimensions are customizable as per client requirement)
SHADE STRUCTURE	SCH 40 MS /GI. Structure is welded and painted in our factory, welding Joints will be minimum 6mm thick.
FOUNDATION	RCC Foundation with footing spec based on the combined dead, imposed and wind load calculation. (foundation not included in the scope of work – based on Customer request)
FASTNERS	We use SS or Galvanized Grade 8.8 Nuts, Bolts & Washers. Flanges , End caps & Base plates will be MS painted
FABRIC	Most commonly used fabric for Car parking shades are PVC Fabric (850/900gsm) or HDPE (Other options include : PTFE, K- SPAN , GRP fiberglass ,GI Profile Sheet or Aluminum Profile sheet)
FINISHING	All Steel Surfaces will be painted with Epoxy Primer & Epoxy Top Coat Paint (thickness ≈ 200microns)
WARRANTY	Standard warranty is 10 Years for Fabric, Structure and Workmanship

CAR PARKING SHADES

PS/A05-SINGLE ARCH 5

PS/A06-SINGLE ARCH 6

PS/A07-DOUBLE POLE ARCH 7

PS/A08-DOUBLE POLE ARCH 8

TECHNICAL SPECIFICATIONS	
STANDARD SIZE (Parking Angle 90°	Length - 6m; Width - 1 Car- 3m, 2 Cars - 6m; Clear Height- 2.5m (All dimensions are customizable as per client requirement)
SHADE STRUCTURE	SCH 40 MS /GI. Structure is welded and painted in our factory, welding Joints will be minimum 6mm thick.
FOUNDATION	RCC Foundation with footing spec based on the combined dead, imposed and wind load calculation. (foundation not included in the scope of work – based on Customer request)
FASTNERS	We use SS or Galvanized Grade 8.8 Nuts, Bolts & Washers. Flanges , End caps & Base plates will be MS painted
FABRIC	Most commonly used fabric for Car parking shades are PVC Fabric (850/900gsm) or HDPE (Other options include : PTFE, K- SPAN , GRP fiberglass ,GI Profile Sheet or Aluminum Profile sheet)
FINISHING	All Steel Surfaces will be painted with Epoxy Primer & Epoxy Top Coat Paint (thickness ≈ 200microns)
WARRANTY	Standard warranty is 10 Years for Fabric, Structure and Workmanship

CAR PARKING SHADES

PS/U01-CANTILEVER UMBRELLA

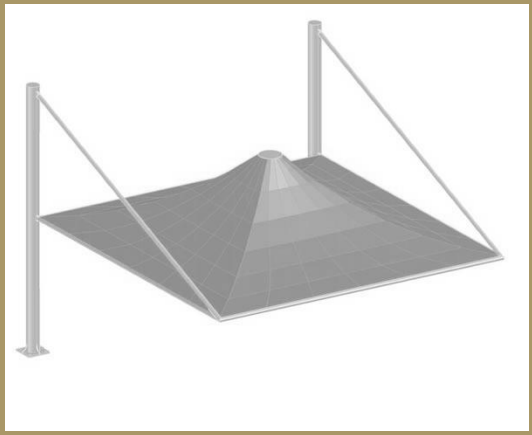

PS/U02- LAMP UMBRELLA 2

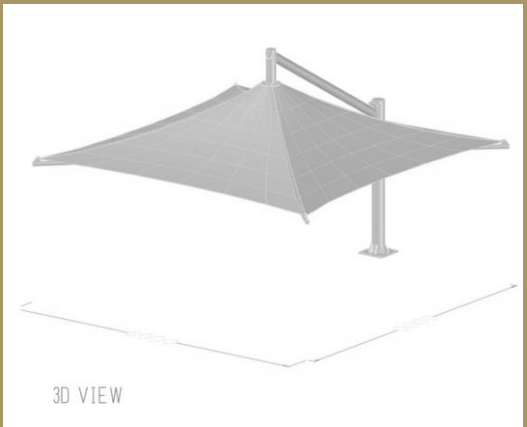

PS/U03-LAMP UMBRELLA 3

PS/U04-INVERTED UMBRELLA

TECHNICAL SPECIFICATIONS	
STANDARD SIZE (Parking Angle 90°	Length - 6m; Width - 1 Car- 3m, 2 Cars - 6m; Clear Height- 2.5m (All dimensions are customizable as per client requirement)
SHADE STRUCTURE	SCH 40 MS /GI. Structure is welded and painted in our factory, welding Joints will be minimum 6mm thick.
FOUNDATION	RCC Foundation with footing spec based on the combined dead, imposed and wind load calculation. (foundation not included in the scope of work – based on Customer request)
FASTNERS	We use SS or Galvanized Grade 8.8 Nuts, Bolts & Washers. Flanges , End caps & Base plates will be MS painted
FABRIC	Most commonly used fabric for Car parking shades are PVC Fabric (850/900gsm) or HDPE (Other options include : PTFE, K- SPAN , GRP fiberglass ,GI Profile Sheet or Aluminum Profile sheet)
FINISHING	All Steel Surfaces will be painted with Epoxy Primer & Epoxy Top Coat Paint (thickness ≈ 200microns)
WARRANTY	Standard warranty is 10 Years for Fabric, Structure and Workmanship

CAR PARKING SHADES

PS/P01-CANTILEVER PYRAMID

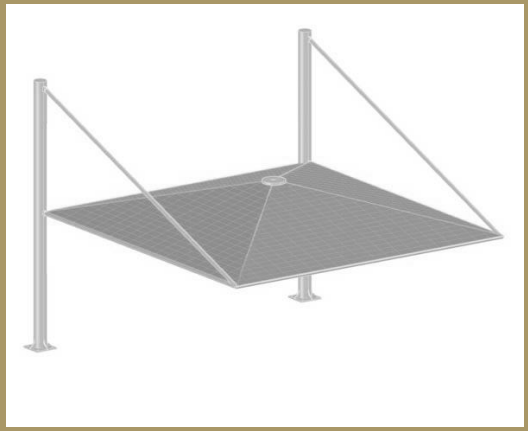

PS/F01-FLAT ROOF Y-POLE

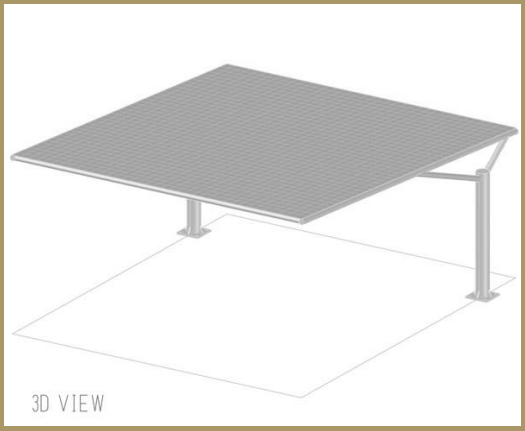

PS/S01-CAR SHADE/SOLAR

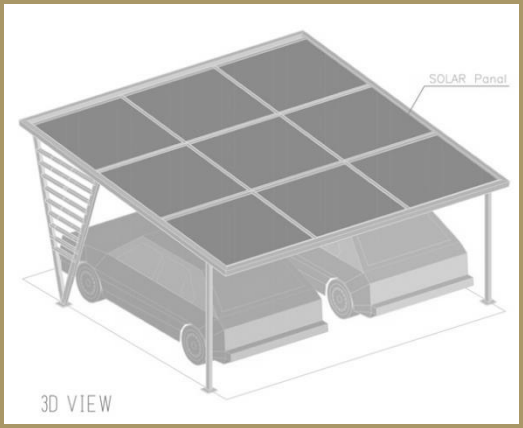

TECHNICAL SPECIFICATIONS	
STANDARD SIZE (Parking Angle 90°	Length - 6m; Width - 1 Car- 3m, 2 Cars - 6m; Clear Height- 2.5m (All dimensions are customizable as per client requirement)
SHADE STRUCTURE	SCH 40 MS /GI. Structure is welded and painted in our factory, welding Joints will be minimum 6mm thick.
FOUNDATION	RCC Foundation with footing spec based on the combined dead, imposed and wind load calculation. (foundation not included in the scope of work – based on Customer request)
FASTNERS	We use SS or Galvanized Grade 8.8 Nuts, Bolts & Washers. Flanges , End caps & Base plates will be MS painted
FABRIC	Most commonly used fabric for Car parking shades are PVC Fabric (850/900gsm) or HDPE (Other options include : PTFE, K- SPAN , GRP fiberglass ,GI Profile Sheet or Aluminum Profile sheet)
FINISHING	All Steel Surfaces will be painted with Epoxy Primer & Epoxy Top Coat Paint (thickness ≈ 200microns)
WARRANTY	Standard warranty is 10 Years for Fabric, Structure and Workmanship

AWNINGS & SUN SHADES

الهتان
Al Hattan
Engineered for seasons and reasons

SWIMMING POOL SHADES

We do the Custom designing and manufacturing of all Commercial Shade Structures for Aquatic Centres, Resorts and Water parks. Our materials and designs are long lasting, and our experienced team can customize the designs to give you exactly what you need for the swimming pools and aquatic area.

PLAYAREA SHADES

Well-designed creative and colourful playground shades give an opportunity for the children to play and learn in an open environment without getting exposed to extreme outside heat & UV rays. We manufacture, Supply and do the installation of high-quality playground shade Structures for Schools, Parks, Country clubs and Day-care.

AWNINGS & SUNSHADES

WALKWAY SHADES

We provide our expertise and support to Architects & Civil Engineers in the prototype designing of tensile structure projects, Our In-house production team can do the manufacturing and installation of structurally complex and creative Fabric Structures for Airport Walkways, Public assembly, Stadiums & Concert venues. It is the flexibility of the fabric structures that gives endless opportunities and scope in designing creative concept buildings.

LIVESTOCK SHADES

Sail Shades & Waterproof fabric structures have many advantages over the traditional iron structures. Fabric Shade Structures have natural ventilation and can be designed to maximize afternoon shade, whilst structures constructed from GI sheets prevents air movements. HDPE fabric used for Shades are of high quality with 100% UV protection and can help prevent heat stress and livestock losses.

AWNING SHADES

We manufacture, supply and do the installation of Retractable exterior shades, patio awnings, screens or roller shades. Al Hattan Tents is a long-standing leader of the fabric shade structure industry in UAE. Our products are designed, manufactured and installed by a well experienced team of professionals. If you have any Custom requirements, our team will assist you from the design to fabrication, construction and installation.

ALUMINIUM PERGOLA SHADES

Pergolas became more popular garden feature during medieval period in Italy & Europe. We manufacture only aluminium frame pergolas, whether they are freestanding or attached to the façade. Aluminium does not get corroded by the salty and humid weather conditions of UAE. Pergolas enhances the aesthetic beauty of the buildings and adds value to the main structure. It is a beautiful welcoming lounge to relax with family and friends.

TENTS RENTAL & RELOCATION SERVICES

Al Hattan Tents have exclusive selection of party tents to suite any outdoor events. Based on the number of Guests and the nature of the event you can choose the design and size. Our prices are affordable. Al Hattan Tents do Tent's relocation & repair services, we do dismantle, transportation and re-installation of fabric structures of any size and shape in a professional way.

MAINTENANCE & CLEANING

We have over 15 years of experience in the Fabric structure industry, we understand the design intricacies better & our technicians are well trained to specifically clean industrial-size fabric structures, Big Tents & parking shades including HDPE, PVC, PTFE, ETFE and Acoustical Liners without voiding manufacturer warranties.

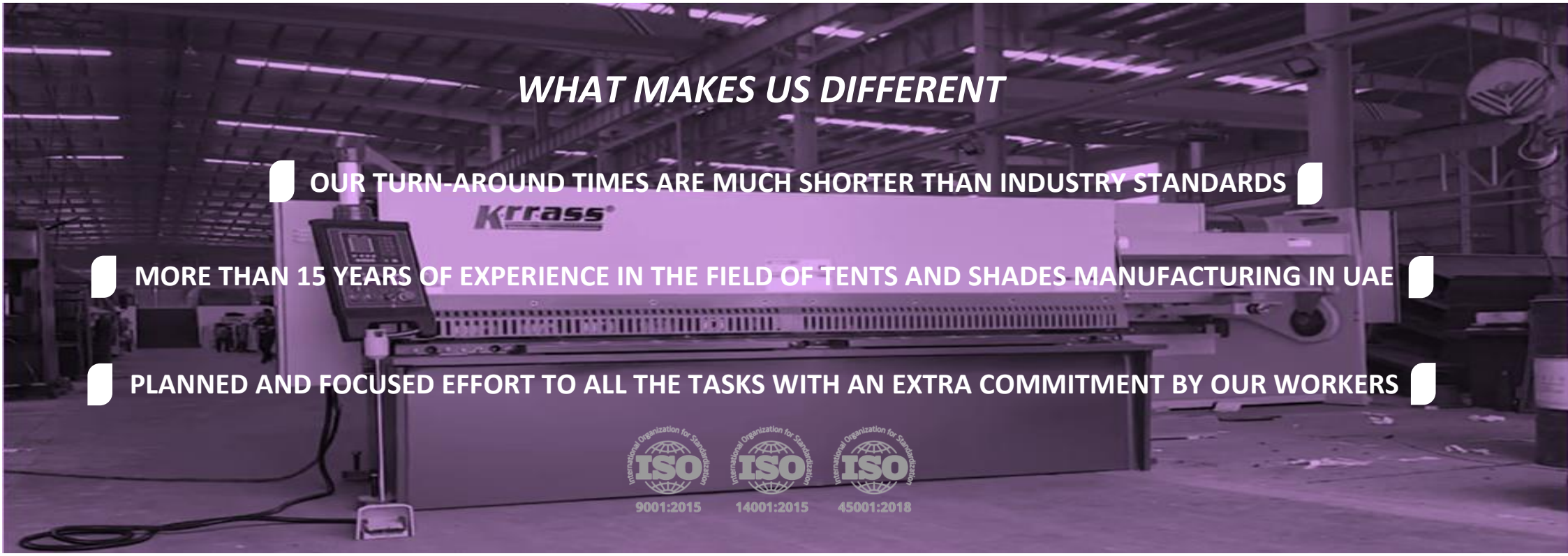

WHAT MAKES US DIFFERENT

- OUR TURN-AROUND TIMES ARE MUCH SHORTER THAN INDUSTRY STANDARDS
- MORE THAN 15 YEARS OF EXPERIENCE IN THE FIELD OF TENTS AND SHADES MANUFACTURING IN UAE
- PLANNED AND FOCUSED EFFORT TO ALL THE TASKS WITH AN EXTRA COMMITMENT BY OUR WORKERS

Call Us

MOB: +97-562221906/501660663

OFFICE: 065672027

Address

Al Hattan Tents & Shades LLC

P.O Box 1890, Sharjah, UAE

Email

info@alhattantents.com

THANK YOU